Connection hoses and cables	
Water hose:	✓
Waste water hose:	✗
Electric cable:	✓ 2x

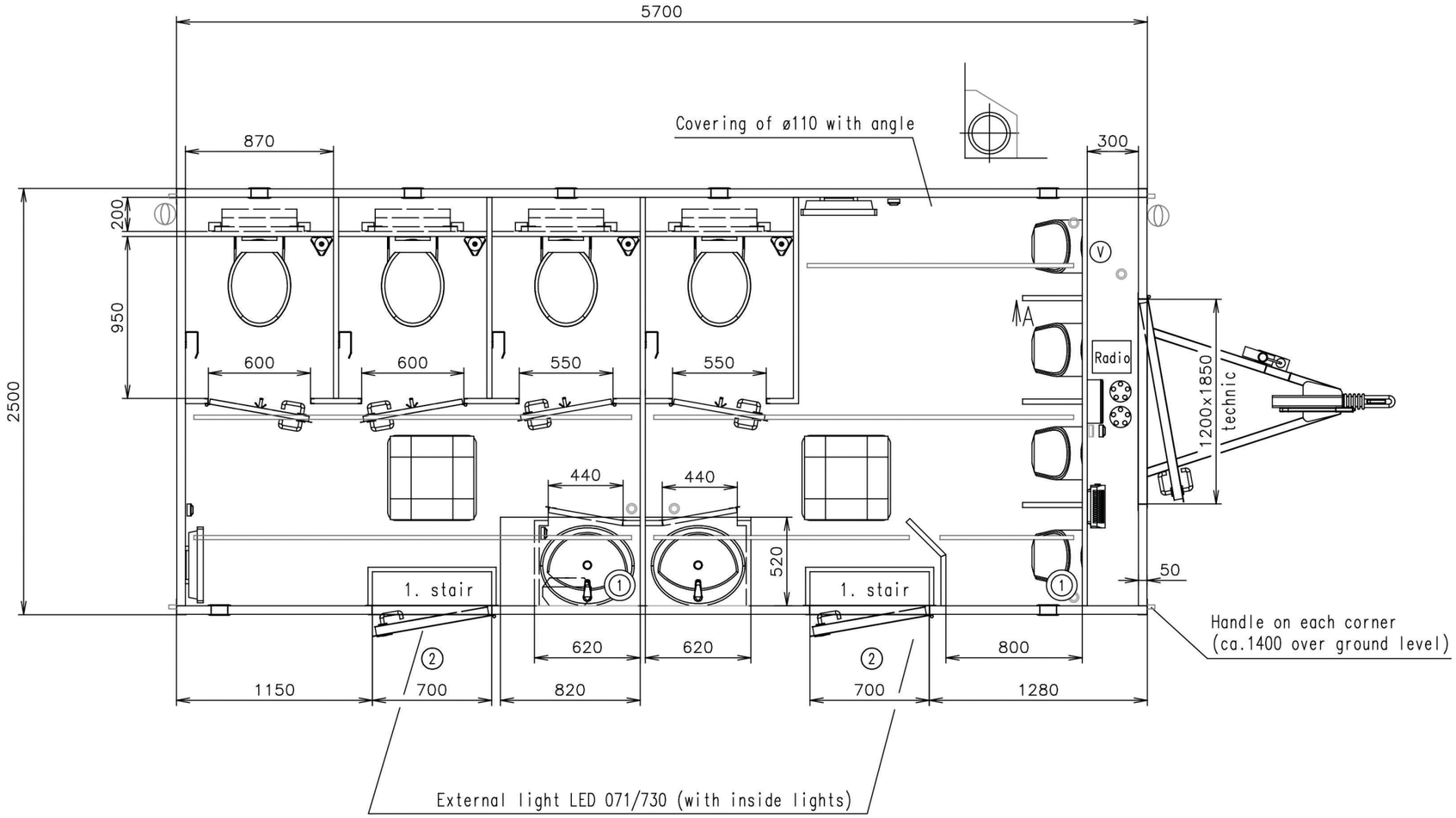

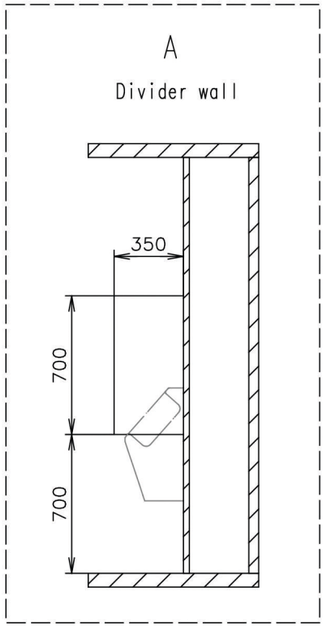

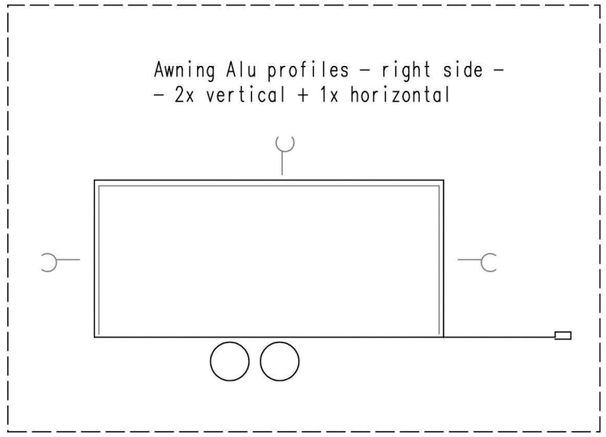

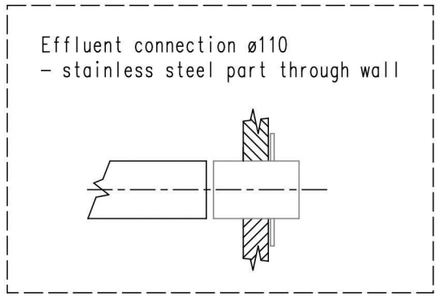

Notes:
- Working desks in waterproof compact desk Egger (dark color)
- Interior doors + divider walls in black decor 6515
- External doors – without cylinders
- Spare wheel – free loaded

Interior height:	2100 mm	Total weight:	2000 kg
Color:	RAL 7042	Tare weight-estimate:	1800 kg
Floor:	PVC Jupiter 148708	Centre of wheels from rear side:	2790 mm
Date:	30.11.2016	Wheels:	155 R13
Sani Mobil		Drawing number:	2285-57-2_1/2 (Sprenger)

(Cabling and piping is not shown on the 3D views and drawings)

Connection hoses and cables	
Water hose:	✓
Waste water hose:	✗
Electric cable:	✓ 2x

Water connection 3/4" (on the chassis)
+ filter + reduction valve

2x Electric connection (through the floor)
(230V-16A) (1x heatings) (1x the rest)

2x Effluent connection ø110 (through wall)
- stainless steel part

Power point

Light switch

Switch board (1200 over floor)

Light LED stripe

Heating (500W)

Heating (750W)

Floor drain hole

Ventilation ø120

Wash-basin (built-in) Multi 1690 (550x470)
+ standard water tap

Hanging toilet (toilet seat - steel holders)

Urinal - Vitra Siko (water flush)

Hot water boiler Wterm FHN (5l)

Roof window Dometic (400x400)

Brush toilet

Toilet paper holder

Clothes hanger

Mirror (600x600) + black frame around

1 Speaker

2 Foldable stairs Fiona
(update on fixing of stair)
+ stainless steel handrail

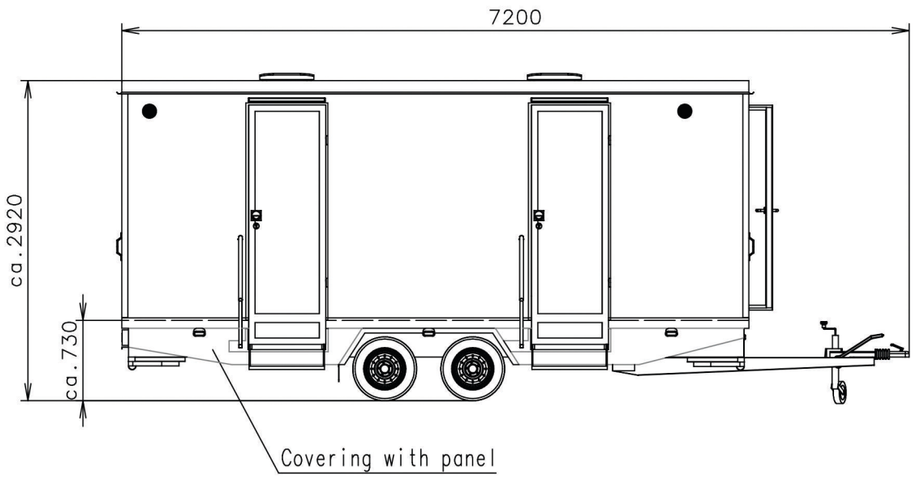

Notes:
- Working desks in waterproof compact desk Egger (dark color)
- Interior doors + divider walls in black decor 6515
- External doors - without cylinders
- Spare wheel - free loaded

Interior height:	2100 mm	Total weight:	2000 kg
Color:	RAL 7042	Tare weight-estimate:	1800 kg
Floor:	PVC Jupiter 148708	Centre of wheels from rear side:	2790 mm
Date:	30.11.2016	Wheels:	155 R13
Sani Mobil		Drawing number: 2285-57-2_2/2 (Sprenger)	

(Cabling and piping is not shown on the 3D views and drawings)